Easy-Touch - Striker for wooden frame

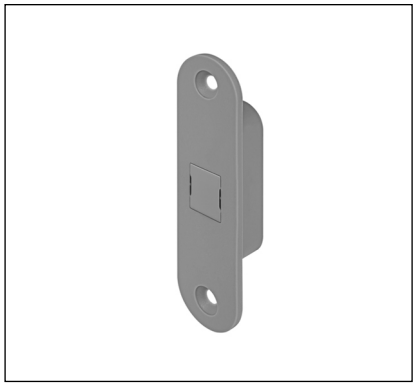

Description

Magnetic striker in plastic material with round edges.
Easy-Touch is compatible with the milling of Easy-Matic and Easy-Fix 22x82 mm, 2,2 mm thickness.

Use

To be coupled with Touch installing it on the frame as indicated in the picture.

Fastening

With 2 screws 3,5x20 mm.

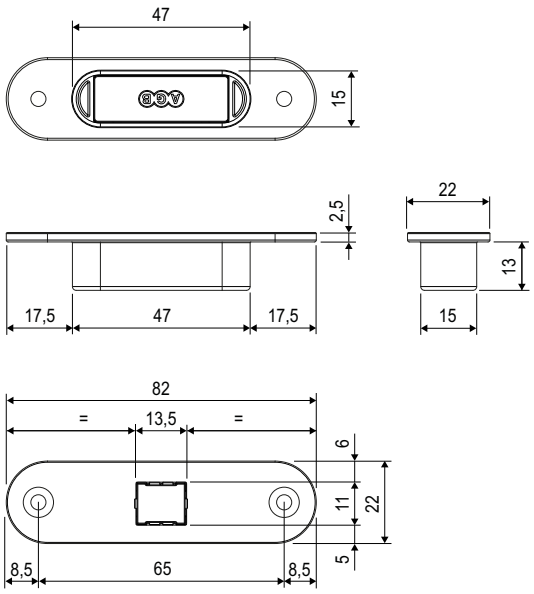

Example of application

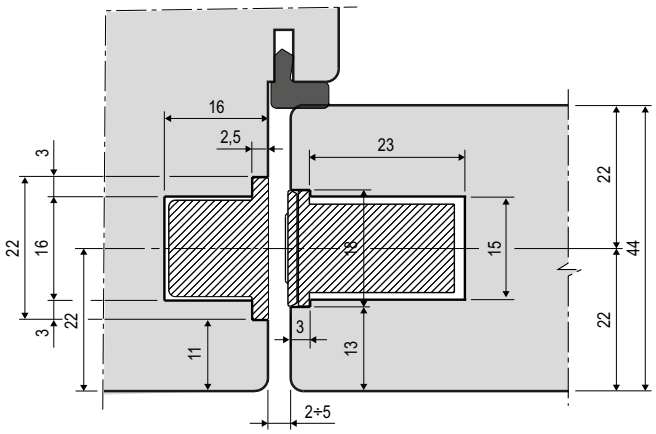

Order Specifications

Article	
B02404.31.XX	

Note. *Refer to the price list in force to check the availability of the finishes.*